Summary in Graph

Exam Summary (GATE Overflow CS Test Series 2026 | Mock GATE 2)

Qs. Attempted:	0 (0 + 0)
Correct Attempts:	0 (0 + 0)
Incorrect Attempts:	0 (0 + 0)
Correct Marks:	0 (0 + 0)
Penalty Marks:	0 (0 + 0)
Resultant Marks:	0 (0 + 0)

Total Questions:	65 (30 + 35)
Total Marks:	100 (30 + 70)
Exam Duration:	180 Minutes
Time Taken:	0 Minutes

Individual Question Statistics

Select Metric: Marks Obtained

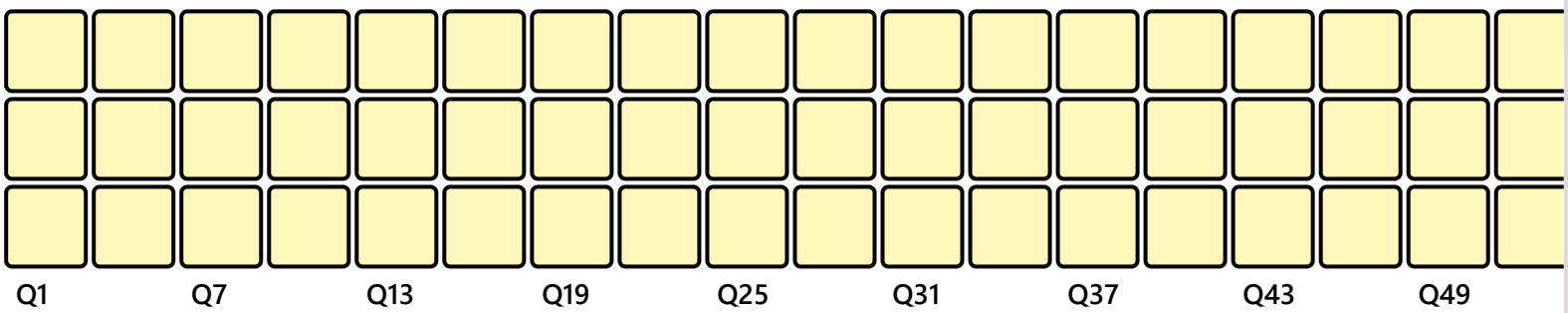

* Average Stats based on first-attempt stats of Top 10% (12) out of 117 users

EXAM RESPONSE EXAM STATS FEEDBACK

Aptitude

Q #1 Multiple Choice Type Award: 1 Penalty: 0.33 Quantitative Aptitude

Let $a(t), b(t)$, and $c(t)$ be the lengths of the three sides of a triangle t in non-decreasing order (i.e. $a(t) \leq b(t) \leq c(t)$).

We define the sets:

- ■$X := \{\text{Triangle } t : a(t) = b(t)\}$

- ■$Y := \{\text{Triangle } t : b(t) = c(t)\}$

Which of the following will represent an isosceles triangle?

A. $X \cup Y$
B. $X \cap Y$
C. $X \oplus Y$
D. None of the above

Your Answer: | Correct Answer: A | Not Attempted | Time taken: 00min 03sec | Discuss

Q #2 | Multiple Choice Type | Award: 1 | Penalty: 0.33 | Verbal Aptitude

Four words are given of which only one is synonymous with the given word. Select the synonym.

Verge

A. Crossed
B. Slope
C. Threshold
D. Tend

Your Answer: | Correct Answer: C | Not Attempted | Time taken: 00min 00sec | Discuss

Q #3 | Numerical Type | Award: 1 | Penalty: 0 | Quantitative Aptitude

Alexa was flying a kite on a hill, but she dumped her kite into the pond below. If the length of the string of her kite is $90\sqrt{3}$ meters and the angle of depression from her position to the kite is 60°, then height of the hill where she standing is _____ (meter)

Your Answer: | Correct Answer: 135 | Not Attempted | Time taken: 00min 00sec | Discuss

Q #4 | Numerical Type | Award: 1 | Penalty: 0 | Quantitative Aptitude

Person A's present age is two-seventh of the age of person B. After 6 years, A will be one-third of the age of B. How old is person B at present?

Your Answer: | Correct Answer: 84 | Not Attempted | Time taken: 00min 00sec | Discuss

Q #5 | Multiple Choice Type | Award: 1 | Penalty: 0.33 | Quantitative Aptitude

A deck of 9 cards numbered 1 through 9 is shuffled, and a card is drawn from the deck. If a card is drawn and the number is even, what is the probability that the number is prime?

A. $\frac{1}{5}$
B. $\frac{1}{6}$
C. $\frac{2}{7}$
D. $\frac{1}{4}$

Your Answer: | Correct Answer: D | Not Attempted | Time taken: 00min 00sec | Discuss

Q #6 | Numerical Type | Award: 2 | Penalty: 0 | Quantitative Aptitude

The following pie-chart shows the percentage distribution of the expenditure incurred in publishing a book. Study the pie-chart and the answer the given question based on it.

Various Expenditures (in percentage) Incurred in Publishing a Book

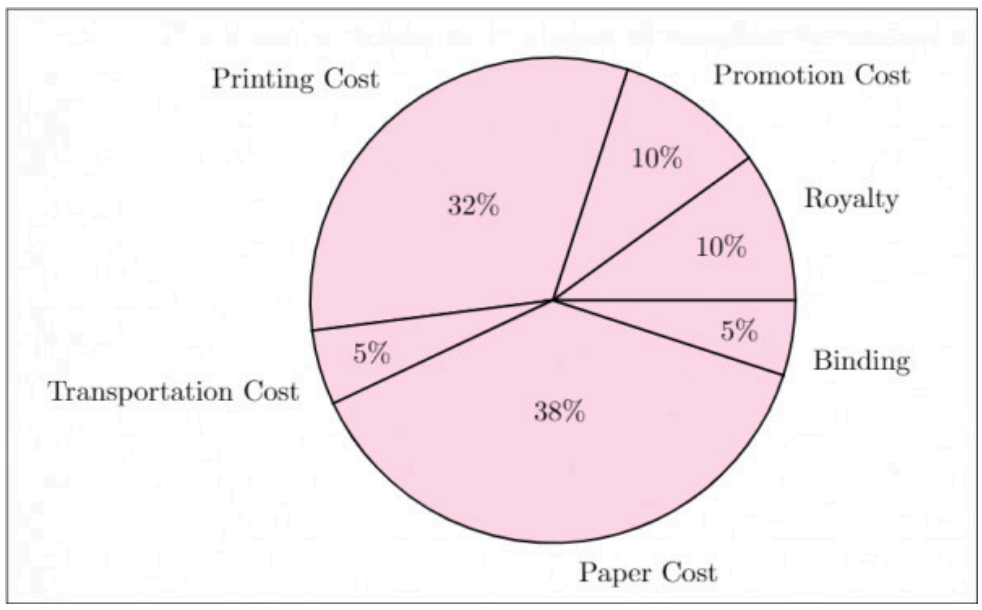

The price of the book is marked 30% above the C.P. If the marked price of the book is $\text{Rs.}2021$, then what is the cost of the paper used in a single copy of the book (rounded to 2 decimal points)?

Your Answer: | Correct Answer: 590.7:590.8 | Not Attempted | Time taken: 00min 00sec | Discuss

Q #7 | Multiple Choice Type | Award: 2 | Penalty: 0.67 | Quantitative Aptitude

The angle between the minute hand and the hour hand of a clock when the time is $9:40$, is?

A. 40°
B. 50°
C. 70°
D. 20°

Your Answer: | Correct Answer: B | Not Attempted | Time taken: 00min 00sec | Discuss

Q #8 | Multiple Choice Type | Award: 2 | Penalty: 0.67 | Verbal Aptitude

Choose the most appropriate alternative from the options given below to complete the sentence:
The doctors reassured her that the _____ was better for cancer detected in the early stages.

A. Prognosis
B. Setback
C. Incitement
D. Restriction

Your Answer: | Correct Answer: A | Not Attempted | Time taken: 00min 00sec | Discuss

Q #9 | Multiple Choice Type | Award: 2 | Penalty: 0.67 | Analytical Aptitude

A girl rode her bicycle Northward, then turned left and rode $21\ \mathrm{km}$ and again turned left and rode $42\ \mathrm{km}$. She found herself $21\ \mathrm{km}$ west of her starting point. How far did she ride northward initially?

A. $21\ \mathrm{km}$
B. $63\ \mathrm{km}$
C. $84\ \mathrm{km}$
D. $42\ \mathrm{km}$

Your Answer: | Correct Answer: D | Not Attempted | Time taken: 00min 00sec | Discuss

Q #10 | Multiple Choice Type | Award: 2 | Penalty: 0.67 | Verbal Aptitude

While many people think of genetic manipulation of food crops as being aimed at developing larger and larger plant varieties, some plant breeders have in fact concentrated on discovering or producing dwarf varieties, which are roughly half as tall as normal varieties.
Which of the following would, if true, most help to explain the strategy of the plant breeders referred to above?

A. Plant varieties used as food by some are used as ornaments by others.
B. Crops once produced exclusively for human consumption are often now used for animal feed.
C. The wholesale prices of a given crop decrease as the supply of it increases.
D. Short plants are less vulnerable to strong wind and heavy rains.

Your Answer: | Correct Answer: D | Not Attempted | Time taken: 00min 00sec | Discuss

Technical

Q #1 | Multiple Choice Type | Award: 1 | Penalty: 0.33 | Computer Networks

Statement 1: Suppose Host A is sending a large file to Host B over a TCP connection. If the sequence number for a segment of this connection is m, then the sequence number for the subsequent segment will necessarily be $m+1$.

Statement 2 : Host A is sending Host B a large file over a TCP connection. Assume Host B has no data to send Host A. Host B will not send acknowledgements to Host A because Host B cannot piggyback the acknowledgements on data.
Which of the following is true?

A. Both statements are true
B. Statement 1 is true and Statement 2 is false
C. Both statements are false
D. Statement 2 is true and Statement 1 is false

Your Answer: | Correct Answer: C | Not Attempted | Time taken: 00min 00sec | Discuss

Q #2 | Multiple Choice Type | Award: 1 | Penalty: 0.33 | Computer Networks

ARP is

A. A layer 3 protocol that is used by layer 3
B. A layer 2 protocol that is used by layer 2
C. A layer 3 protocol that is used by layer 2
D. A layer 2 protocol that is used by layer 3

Your Answer: | Correct Answer: C | Not Attempted | Time taken: 00min 00sec | Discuss

Q #3 | Numerical Type | Award: 1 | Penalty: 0 | Databases

Given that the relation

Student

FirstName	LastName	Weight
Rahul	Soni	40
Anam	Patel	null
Donald	Trump	75
Anuj	Sahu	45
Kim-jong	Un	105
Alex	Carry	50

The number of tuples returned by the following tuple relational calculus query will be _____

$$\{t \cdot \text{FirstName} \mid \text{Student}(t) \text{ AND } t \cdot \text{Weight} < 50\}$$

Your Answer: | Correct Answer: 2 | Not Attempted | Time taken: 00min 00sec | Discuss

Q #4 | Numerical Type | Award: 1 | Penalty: 0 | Linear Algebra

The value of determinant of non identity idempotent matrix is _____

Your Answer: | Correct Answer: 0 | Not Attempted | Time taken: 00min 00sec | Discuss

Q #5 | Multiple Choice Type | Award: 1 | Penalty: 0.33 | Set Theory & Algebra

Let R be a relation on set A. Assuming A has at least three elements and R^{-1} denotes the inverse relation, state which of the following statement is/are TRUE.
Statement 1 : If R is reflexive then $R \cap R^{-1}$ is not empty.
Statement 2 : If R is symmetric then $R = R^{-1}$

A. Both statements are true
B. Statement 1 is true and Statement 2 is false
C. Both statements are false
D. Statement 2 is true and Statement 1 is false

Your Answer: | Correct Answer: A | Not Attempted | Time taken: 00min 00sec | Discuss

Q #6 | Multiple Choice Type | Award: 1 | Penalty: 0.33 | Computer Networks

Statement 1: The $p-$persistent algorithm with binary exponential backoff is efficient over a wide range of loads.

Statement 2 : An algorithm is needed with CSMA to specify what a station should do if the medium is found busy.

Which of the above statements is/are TRUE?

A. Both statements are true
B. Statement 1 is true but statement 2 is false

C. Both statements are false
D. Statement 2 is true but statement 1 is false

Your Answer: | Correct Answer: D | Not Attempted | Time taken: 00min 00sec | Discuss

Q #7 | Numerical Type | Award: 1 | Penalty: 0 | Compiler Design

The number of tokens in the following C code fragment is _____

```
int main()
{
   int x = 1, y = 5, z=4;
   x = y, x++;
   y *= ++x * -z--;
   printf("The value is :%d",y);
   return 0;
}
```

Your Answer: | Correct Answer: 45 | Not Attempted | Time taken: 00min 00sec | Discuss

Q #8 | Multiple Select Type | Award: 1 | Penalty: 0 | Calculus

The minimum value of the function

$$f(x) = \frac{x^2}{2} - x$$

occurs at (Mark all the appropriate choices)

A. $x = -1$
B. $x = 1$
C. $x = 0$
D. $x = \frac{1}{\sqrt{2}}$

Your Answer: | Correct Answer: B | Not Attempted | Time taken: 00min 00sec | Discuss

Q #9 | Numerical Type | Award: 1 | Penalty: 0 | Operating System

Suppose the time to service a page fault is on the average 100 microseconds, while a memory access on average takes 20 nanoseconds. What should be the maximum number of page faults per million-page accesses in order to guarantee a page fault overhead of less than 10%?

Your Answer: | Correct Answer: 19 | Not Attempted | Time taken: 00min 00sec | Discuss

Q #10 | Multiple Select Type | Award: 1 | Penalty: 0 | Compiler Design

Which of the following sentences regarding Viable prefixes is/are CORRECT? (Mark all the appropriate choices)

A. Viable prefixes are the set of prefixes of right-sentential forms that can appear on the stack of a shift-reduce parser
B. Viable prefixes are the set of prefixes of right-sentential forms that do not extend past the end of the right-most handle

C. Viable prefixes are context-free but not necessarily regular
D. Viable prefixes have prefix-free property (no string is a prefix of any other string)

Your Answer: | Correct Answer: A;B | Not Attempted | Time taken: 00min 00sec | Discuss

Q #11 Numerical Type | Award: 1 | Penalty: 0 | Combinatory

How many ways can we choose 3 numbers from the set $\{1, 2, 3, 4, 5, 6, 7, 8\}$ so that more odd numbers are chosen than even?

Your Answer: | Correct Answer: 28 | Not Attempted | Time taken: 00min 00sec | Discuss

Q #12 Numerical Type | Award: 1 | Penalty: 0 | Digital Logic

A 21-bit asynchronous binary counter is made up of twenty one flip-flops, each with a 21 ns propagation delay. The total propagation delay is _____ (nanoseconds)

Your Answer: | Correct Answer: 441 | Not Attempted | Time taken: 00min 00sec | Discuss

Q #13 Multiple Select Type | Award: 1 | Penalty: 0 | Theory of Computation

Which of the following is/are the regular grammar for the given finite automata? (Mark all the appropriate choices)

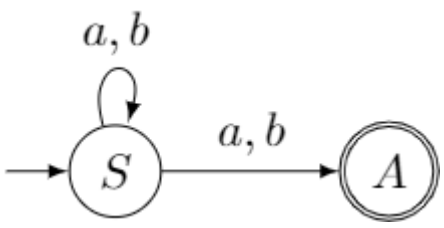

A. $S \to aS$
$S \to bS$
$S \to a$
$S \to b$
B. $S \to aS$
$S \to bS$
$A \to \varepsilon$
C. $S \to aS$
$S \to bS$
$S \to aA$
$S \to bA$
$A \to \varepsilon$
D. $S \to aS$
$S \to bS$
$S \to aA$
$S \to bA$
$S \to \varepsilon$

Your Answer: | Correct Answer: A;C | Not Attempted | Time taken: 00min 00sec | Discuss

Q #14 Numerical Type | Award: 1 | Penalty: 0 | Digital Logic

A 4-bit ripple counter and a 4-bit synchronous counter are made using flip-flops having a propagation delay of 2021 ns each. If the worst case delay in the ripple counter and the synchronous counter are T_{ripple} and $T_{\text{synchronous}}$ respectively, then the value of $T_{\text{ripple}} - T_{\text{synchronous}} =$_____ (in nanoseconds)

Your Answer: | Correct Answer: 6063 | Not Attempted | Time taken: 00min 00sec | Discuss

Q #15 | Multiple Choice Type | Award: 1 | Penalty: 0.33 | Computer Networks

Which of the following commands is/are NOT from the Simple Mail Transfer Protocol (SMTP)?

A. RCPT
B. HELP
C. TURN
D. All are from SMTP

Your Answer: | Correct Answer: D | Not Attempted | Time taken: 00min 00sec | Discuss

Q #16 | Numerical Type | Award: 1 | Penalty: 0 | Set Theory & Algebra

Let

$$Q(a,b) = \begin{cases} 5 & ; \text{ if } a < b \\ Q(a-b, b+2) + a & ; \text{ if } a \geq b \end{cases}$$

where a, b are integers. The value of $Q(5,3)$ is _____

Your Answer: | Correct Answer: 10 | Not Attempted | Time taken: 00min 00sec | Discuss

Q #17 | Multiple Choice Type | Award: 1 | Penalty: 0.33 | Linear Algebra

Let P be the matrix $\begin{bmatrix} 5/13 & 12/13 \\ x & 5/13 \end{bmatrix}$. For what value of x, will P be orthogonal?

A. $\frac{5}{13}$
B. $\frac{-12}{13}$
C. $\frac{-7}{13}$
D. $\frac{7}{13}$

Your Answer: | Correct Answer: B | Not Attempted | Time taken: 00min 00sec | Discuss

Q #18 | Multiple Choice Type | Award: 1 | Penalty: 0.33 | Combinatory

The generating function for the sequence with recurrence relation $a_n = 3a_{n-1} - a_{n-2}$ with initial terms $a_0 = 1$ and $a_1 = 5$ is.

A. $\frac{1+2x}{1-3x+x^2}$
B. $\frac{1-2x}{1-3x+x^2}$
C. $\frac{1+2x}{1+3x+x^2}$
D. $\frac{1+x}{1-3x+x^2}$

Your Answer: | Correct Answer: A | Not Attempted | Time taken: 00min 00sec | Discuss

Q #19 Numerical Type | Award: 1 | Penalty: 0 | Combinatory

Find the minimum number of students in a class to be sure that three of them are born in the same day of the week.

Your Answer: | Correct Answer: 15 | Not Attempted | Time taken: 00min 00sec | Discuss

Q #20 Multiple Choice Type | Award: 1 | Penalty: 0.33 | Probability

A player tosses two fair coins. He wins $\$2$ if two heads occur, and $\$1$ if one head occurs. On the other hand, he loses $\$3$ if no heads occur. Find the expected value E of the game.

A. 1
B. 0.5
C. 0.25
D. 0.75

Your Answer: | Correct Answer: C | Not Attempted | Time taken: 00min 00sec | Discuss

Q #21 Multiple Choice Type | Award: 1 | Penalty: 0.33 | Combinatory

How many ways can you paint the faces of a regular tetrahedron with four colors if each face is painted a different color? (Assume that two paintings that can be oriented to look the same are considered indistinguishable).

A. 6
B. 24
C. 2
D. None of these

Your Answer: | Correct Answer: C | Not Attempted | Time taken: 00min 00sec | Discuss

Q #22 Multiple Choice Type | Award: 1 | Penalty: 0.33 | Combinatory

Let $S = \{1, 2, 3, 4, 5\}$. The number of unordered pairs A, B where A and B are disjoint subsets of S is. (counting unordered pairs simply means we do not distinguish the pairs A, B and B, A)

A. 243
B. 125
C. 122
D. 257

Your Answer: | Correct Answer: C | Not Attempted | Time taken: 00min 00sec | Discuss

Q #23 Multiple Choice Type | Award: 1 | Penalty: 0.33 | Set Theory & Algebra

Let R_1 and R_2 be the "congruent modulo 3" and the "congruent modulo 4" relations, respectively, on the set of integers. That is, $R_1 = \{(a,b) \mid a \equiv b(\mod 3)\}$ and $R_2 = \{(a,b) \mid a \equiv b(\mod 4)\}$. Which of the following will represent relation $P = R_1 \cup R_2$?

A. $P : \{(a,b) \mid a \equiv b(\mod 12)\}$
B. $P : \{(a,b) \mid (a-b) \equiv 0,3,4,6,8,9(\mod 12)\}$
C. $P : \{(a,b) \mid a \equiv b(\mod 4)\}$
D. $P : \{(a,b) \mid a \equiv b(\mod 7)\}$

Your Answer: | Correct Answer: B | Not Attempted | Time taken: 00min 00sec | Discuss

Q #24

Multiple Choice Type | Award: 1 | Penalty: 0.33 | Programming in C

What does the following function do?

```c
int Dosomething(int n)
{
    int ceil = sqrt(n);
    int j;
    for(j=ceil;j>1;j--)
    {
       if(n%j==0 && j<=n)
       return 1;
    }
  return 0;
}
```

A. Return 1 whenever n is a prime number
B. Return 0 whenever n is a prime number
C. Return 0 whenever n is a composite number
D. None of the above

Your Answer: | Correct Answer: B | Not Attempted | Time taken: 00min 00sec | Discuss

Q #25

Multiple Choice Type | Award: 1 | Penalty: 0.33 | Linear Algebra

If P and Q are matrices of same order and $PQ = P$, $QP = Q$, then the expression $(P^5 + Q^5)(P+Q)^5$ evaluates to be

A. $(P+Q)$
B. $8(P+Q)(1+3PQ)$
C. $16(P+Q)$
D. $32(P+Q)$

Your Answer: | Correct Answer: D | Not Attempted | Time taken: 00min 00sec | Discuss

Q #26

Numerical Type | Award: 2 | Penalty: 0 | CO & Architecture

Assume that the time required for a single disk read or write operation (in milliseconds) is $40 + n$, where n is the number of kilobytes of data read or written. A 14 kilobyte file is stored in a block-oriented file system with a 4 kilobyte block size. Assuming the file's data has already been located in the disk, the time (in milliseconds) it'll take to read it all into memory will be _____

Your Answer: | Correct Answer: 174 | Not Attempted | Time taken: 00min 00sec | Discuss

Q #27 Numerical Type | Award: 2 | Penalty: 0 | Operating System

Let a memory have four free blocks of sizes $4\text{k}, 8\text{k}, 20\text{k}, 2\text{k}$. These blocks are allocated following the first-fit strategy. The allocation requests are stored in a queue as shown below from multiple processes executing concurrently.

Request No.	T_1	T_2	T_3	T_4	T_5	T_6	T_7	T_8
Request Sizes	2k	14k	3k	6k	6k	10k	7k	20k
Usage Time	4	10	2	8	4	1	8	6

The time at which the request for T_6 will be completed will be _____

Your Answer: | Correct Answer: 11 | Not Attempted | Time taken: 00min 00sec | Discuss

Q #28 Numerical Type | Award: 2 | Penalty: 0 | Operating System

Consider a computer system with 32-bit virtual addressing and page size of sixteen kilobytes. If the computer system has a one-level page table per process and each page table entry requires 40 bits, then the size of the per-process page table is _____ megabytes.

Your Answer: | Correct Answer: 1.25:1.26 | Not Attempted | Time taken: 00min 00sec | Discuss

Q #29 Multiple Select Type | Award: 2 | Penalty: 0 | Databases

Consider a relation schema $R(A, B, C, D, E, F)$ on which the following functional dependencies hold : $\{DF \rightarrow C, BC \rightarrow F, E \rightarrow A, ABC \rightarrow E\}$. Which of the following is a valid set of candidate keys of R? (Mark all the apporpriate choices)

A. $ABDE, FBDE, ABCD$
B. $CBDE, FBDE, ABCD$
C. $CBDE, ABDE, ABCD$
D. $FBDE, ABDF, ABCD$

Your Answer: | Correct Answer: B;D | Not Attempted | Time taken: 00min 00sec | Discuss

Q #30 Multiple Choice Type | Award: 2 | Penalty: 0.67 | Databases

Consider the following relational schema:

- Student($\underline{sid : integer}, sname : string, numcourses : integer$)
- Course($\underline{cid : integer}, cname : string$)
- Registration($\underline{sid : integer, cid : integer}, regdate : date$)
- Exams($\underline{eid : integer}, cid : integer, sid : integer, marks : real$)

Consider the following relational query on the above database:

```
SELECT S.sname
FROM Students S
WHERE S.sid IN (SELECT R.sid
FROM Registration R
WHERE R.cid NOT IN (SELECT E.cid
FROM Exams E
WHERE E.cid = R.cid group by E.cid having min(marks) < 50)
```

Assume that relations corresponding to the above schema are not empty. Which one of the following is the correct interpretation of the above query?

A. Names of students who have not taken any course which has an exam of less than 50 marks.
B. Names of students who have taken at least one course which has an exam of less than 50 marks.
C. Names of students who have taken some course which does not have an exam of less than 50 marks.
D. Names of students who have taken any course which has an exam of 50 or more marks.

Your Answer: | Correct Answer: C | Not Attempted | Time taken: 00min 00sec | Discuss

Q #31

Multiple Choice Type | Award: 2 | Penalty: 0.67 | Programming in C

What will be the output?

```c
#include<stdio.h>
int g;
int main()
{
    static int a,b;
    int c=2,d;
    d = (a||(++b &&(c | ++g)));
    printf("%d",d);
}
```

A. 0
B. 3
C. 1
D. Garbage value

Your Answer: | Correct Answer: C | Not Attempted | Time taken: 00min 00sec | Discuss

Q #32

Numerical Type | Award: 2 | Penalty: 0 | Linear Algebra

Alice is a programmer and his brother is a maths student. Both are very good in their field. One day his brother was studying linear algebra and he learned to calculate inverse of matrix, he asked Alice to write a C program for this. The problem was, to write a program to find the inverse of a 2×2 matrix, but the restriction is that the input elements can either be 0 or 1. Alice has written whole program, the logic was similar to that of written in maths book (i.e.,) calculate adjoint and determinant. What is the probability that his program will throw run time error when given some input?

Your Answer: | Correct Answer: 0.625 | Not Attempted | Time taken: 00min 00sec | Discuss

Q #33

Multiple Choice Type | Award: 2 | Penalty: 0.67 | Algorithms

Consider the pseudocode given below. The function Dosomething takes an argument a pointer to the root of an arbitrary tree which uses a queue data structure Q.

```
int Dosomething(struct Node *node)
{
   if(node != NULL)
   {
        Enque(Q,node);
        while (Q is not empty)
       {
            struct Node *temp = Deque(Q);
            if (!temp -> left && temp -> right || temp -> left && !temp -> right)
               count++;
            if (temp -> left != NULL)
               Enque(Q,temp -> left);
            if (temp -> right != NULL)
               Enque(Q,temp -> right);
        }
   }
  return count;
}
```

Which of the following is computer by the above pseudocode?

A. The number of internal nodes of a tree.
B. The number of nodes with one child.
C. The number of 2 child nodes.
D. The number of nodes in the tree.

Your Answer: | Correct Answer: B | Not Attempted | Time taken: 00min 00sec | Discuss

Q #34 Numerical Type | Award: 2 | Penalty: 0 | Data Structures

A new kind of tree, type-X tree, is defined as a binary tree such that all the levels except the last level is completely filled. Let K is the number of type-X tree structure of level $4($ leaf level being $1)$ such that their preorder and postorder traversal matches exactly at 3 indices , then what is the value of K _____

Your Answer: | Correct Answer: 12 | Not Attempted | Time taken: 00min 00sec | Discuss

Q #35 Numerical Type | Award: 2 | Penalty: 0 | Data Structures

Consider the following C program

```
int Dosomething(struct treenode *root , int sum)
{
    if(root==NULL)
      return sum;
    sum = Dosomething(root -> left, sum);
    sum = Dosomething(root -> right, sum);
    if(root -> data%2)
       sum/=root -> data;
    else
       sum*=root -> data;
    return sum;
}
```

If the root of the below tree is passed as the first parameter and the second parameter has the value 1, then the value returned by the function will be _____

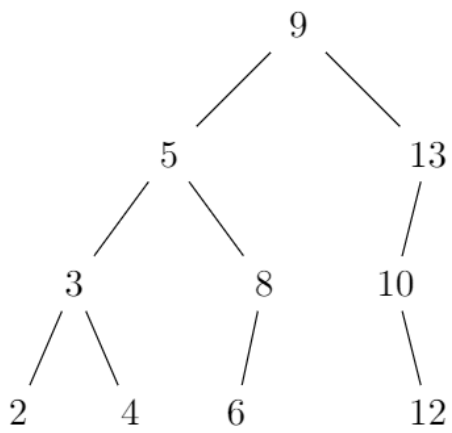

Your Answer: | Correct Answer: 19 | Not Attempted | Time taken: 00min 00sec | Discuss

Q #36 Numerical Type | Award: 2 | Penalty: 0 | Data Structures

The number of possible min-heaps containing each value from $\{1, 2, 3, 4, 5, 6, 7, 8\}$ exactly once is _____

Your Answer: | Correct Answer: 210 | Not Attempted | Time taken: 00min 00sec | Discuss

Q #37 Multiple Choice Type | Award: 2 | Penalty: 0.67 | Data Structures

Consider the array $A[\,] = \{71, 11, 36, 10, 9, 13, 17, 2, 1, 7, 6, 12\}$ which satisfies the max heap property. After 5 delete root operations the sum of leaves comes out to be $3 * k$ where k is an integer. The value of k is

A. 4
B. 6
C. 8
D. 9

Your Answer: | Correct Answer: B | Not Attempted | Time taken: 00min 00sec | Discuss

Q #38 Numerical Type | Award: 2 | Penalty: 0 | Data Structures

A binary search tree is a binary tree with the further property that, for every node,

1. The value of the element in the left child is less than the value of the element at the node.
2. The value of the element in the right child is greater than the value of the element at the node.
3. A max-heap is a complete binary tree with the property that for every node i other than the root, $A[\text{PARENT}(i)] \geq A[i]$.

Lets define a Unrestricted Max-heap as a Max-heap without the completeness requirement- that is it is just a normal binary tree with every root having value greater than its child nodes. Suppose there is a binary search tree with 4 distinct nodes. If p is the probability that this BST is also an Unrestricted Max-heap, the value of $7p =$_____

Your Answer: | Correct Answer: 0.5 | Not Attempted | Time taken: 00min 00sec | Discuss

Q #39 Multiple Choice Type | Award: 2 | Penalty: 0.67 | Data Structures

Suppose from the set of all possible distinct binary trees with 6 nodes, one tree is chosen at random. What is the probability that this chosen tree is a heap (either min or max)?

A. $5/33$
B. $1/2376$
C. $10/33$
D. $1/4752$

Your Answer: | Correct Answer: B | Not Attempted | Time taken: 00min 00sec | Discuss

Q #40 | Multiple Select Type | Award: 2 | Penalty: 0 | Compiler Design

Consider the following grammar:

- $S \rightarrow Aa \mid bAc \mid Bc \mid bBa$
- $A \rightarrow d$
- $B \rightarrow d$

The above grammar is ____ (Mark all the appropriate choices)

A. $LL(1)$
B. $LR(0)$ and $SLR(1)$
C. $LALR(1)$
D. $LR(1)$

Your Answer: | Correct Answer: D | Not Attempted | Time taken: 00min 00sec | Discuss

Q #41 | Multiple Choice Type | Award: 2 | Penalty: 0.67 | Computer Networks

A network using CSMA/CD has a bandwidth of 15 Mbps. If the maximum propagation time (including the delays in the devices and ignoring the time needed to send a jamming signal) is $51.2\ \mu$s, what is the minimum size of the frame?

A. 1536 bytes
B. 192 bytes
C. 1538 bits
D. 192 bits

Your Answer: | Correct Answer: B | Not Attempted | Time taken: 00min 00sec | Discuss

Q #42 | Numerical Type | Award: 2 | Penalty: 0 | Operating System

Disk requests come in to the disk driver for cylinders $10, 22, 20, 2, 40, 6,$ and 38, in that order. A seek takes 6 msec per cylinder. If the arm is initially at cylinder 20, the maximum cylinder number is 40 and the initial direction is moving upwards, the total seek time (in milliseconds) needed for the elevator algorithm is _____

Your Answer: | Correct Answer: 348 | Not Attempted | Time taken: 00min 00sec | Discuss

Q #43 | Numerical Type | Award: 2 | Penalty: 0 | Databases

For a relation schema $R(A, B, C, D, E)$, consider the following set of functional dependencies; $F = \{A \rightarrow BC, CD \rightarrow E, B \rightarrow D, E \rightarrow A\}$. The number of minimal canonical covers of F is _____

Your Answer: | Correct Answer: 1 | Not Attempted | Time taken: 00min 00sec | Discuss

Q #44 Numerical Type | Award: 2 | Penalty: 0 | Digital Logic

If $f_1(w, x, y, z) = \Sigma_m(0, 1, 2, 3, 5, 7, 13, 15)$, $f_2(a, b, c, d) = \Pi_M(0, 1, 2, 4, 5, 8, 10, 13, 14, 15)$ If α, β and γ denote the respective sum of the number of implicants, prime implicants and essential prime implicants of f_1 and f_2, the value of $\alpha - \beta + \gamma$ is _____

Your Answer: | Correct Answer: 28 | Not Attempted | Time taken: 00min 00sec | Discuss

Q #45 Multiple Choice Type | Award: 2 | Penalty: 0.67 | CO & Architecture

Consider a five-stage pipeline with ideal CPI. Assume that 25% of the instructions executed are branch instructions out of which 75% are taken branches. If the branch target is known at the end of EX stage, what will be the pipeline speedup if taken is the default branch prediction and branch misprediction penalty on average is 10 cycles?

A. 3.34
B. 3.07
C. 4.00
D. 4.11

Your Answer: | Correct Answer: B | Not Attempted | Time taken: 00min 00sec | Discuss

Q #46 Numerical Type | Award: 2 | Penalty: 0 | Computer Networks

Station A is sending data to station B over a full-duplex error-free channel. A sliding window protocol is being used for flow control. The send and receive window size is being used for flow control with both the window sizes being 5 frames each. Each frame is 1000 bytes long and the transmission time for such a frame is $60\ \mu s$. Acknowledgment frames sent by B to A are very small and require negligible transmission time. The propagation delay over the link is $200\ \mu s$. What is the max achievable throughput in this communication in Mega bytes per second?

Your Answer: | Correct Answer: 10.86:10.87 | Not Attempted | Time taken: 00min 00sec | Discuss

Q #47 Numerical Type | Award: 2 | Penalty: 0 | Probability

X is a random variable that follows a continuous uniform distribution with probability density function

$$f(x) = \begin{cases} \frac{1}{9} & ; 2012 \leq x \leq 2021 \\ 0 & ; \text{otherwise} \end{cases}$$

If the α is the expectation, and β is the variance of the distribution, then the value of $\alpha - \beta$ is _____ (upto two decimal places)

Your Answer: | Correct Answer: 2009.75 | Not Attempted | Time taken: 00min 00sec | Discuss

Q #48 Numerical Type | Award: 2 | Penalty: 0 | Combinatory

The value of $(2^{2021} + 3^{2021} + 4^{2021} + 5^{2021}) \mod 43$ is _____

Your Answer: | Correct Answer: 38 | Not Attempted | Time taken: 00min 00sec | Discuss

Q #49 Multiple Select Type | Award: 2 | Penalty: 0 | Set Theory & Algebra

Which of the following is/are correct? (Mark all the appropriate choices)

A. If X and Y are finite sets and $f: X \rightarrow Y$ is one-one (injective), then $|X| \leq |Y|$.
B. If X and Y are finite sets and $f: X \rightarrow Y$ is onto (surjective), then $|X| \geq |Y|$.
C. If $f \circ g$ is one-to-one, then f is one-to-one.
D. If $f \circ g$ is one-to-one, then g is one-to-one.

Your Answer: | Correct Answer: A;B;D | Not Attempted | Time taken: 00min 00sec | Discuss

Q #50 Multiple Select Type | Award: 2 | Penalty: 0 | Digital Logic

Which of the following is/are the self-dual function?

A. $f = \Pi_M(0, 2, 4, 6, 8, 10, 12, 14)$
B. $f = \Sigma_m(3, 6, 7, 9, 11, 12, 14, 15)$
C. $f = \Pi_M(1, 2, 3, 5, 7, 11, 13, 15)$
D. $f = \Sigma_m(1, 3, 5, 7, 9, 11, 13, 15)$

Your Answer: | Correct Answer: A;D | Not Attempted | Time taken: 00min 00sec | Discuss

Q #51 Multiple Select Type | Award: 2 | Penalty: 0 | Algorithms

Consider the following graph:

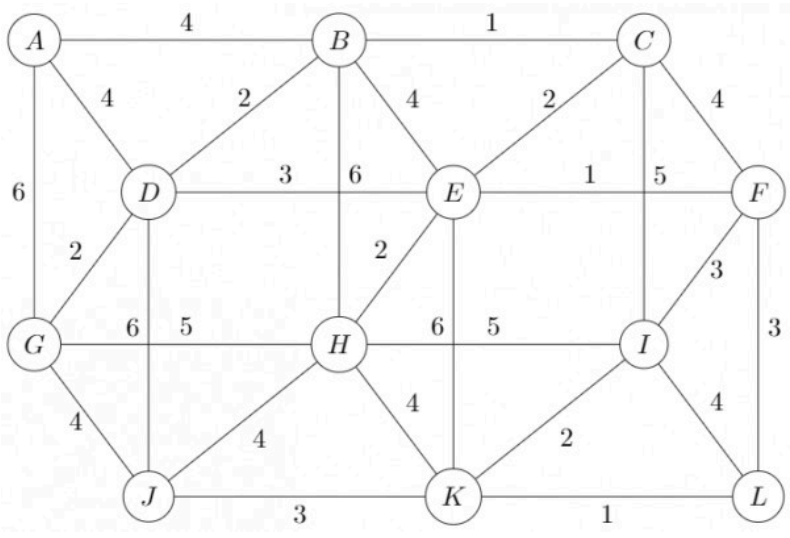

Which of the following can be the sequence of edges added, in that order, to a minimum spanning tree using Kruskal's algorithm? (Mark all the appropriate choices)

A. $(B-C), (E-F), (K-L), (E-C), (I-K), (E-H), (B-D), (D-G), (J-K), (I-F)$, and
B. $(E-F), (K-L), (B-C), (I-K), (E-H), (B-D), (E-C), (D-G), (J-K), (F-L)$, and
C. $(K-L), (B-C), (E-F), (B-D), (D-G), (E-C), (I-K), (E-H), (J-K), (F-L)$, and
D. $(K-L), (B-C), (E-F), (B-D), (E-C), (I-K), (E-H), (D-G), (J-K), (I-F)$, and

Your Answer: | Correct Answer: A;B;C;D | Not Attempted | Time taken: 00min 00sec | Discuss

Q #52 Numerical Type | Award: 2 | Penalty: 0 | CO & Architecture

Consider a 2-way set-associative cache of size 32 KB and block size 64 bytes and using LRU replacement. Initially the cache is empty. The following sequence of access to memory blocks

$$0, 48, 31, 64, 320, 6, 576, 214, 0, 42$$

is repeated 10 times. If the number of conflict misses and compulsory misses are A and B respectively, $A + 2B =$ _____

Your Answer: | Correct Answer: 45 | Not Attempted | Time taken: 00min 00sec | Discuss

Q #53 Numerical Type | Award: 2 | Penalty: 0 | Theory of Computation

The number of states, after the minimization of the below Determinstic Finite Automata is _____

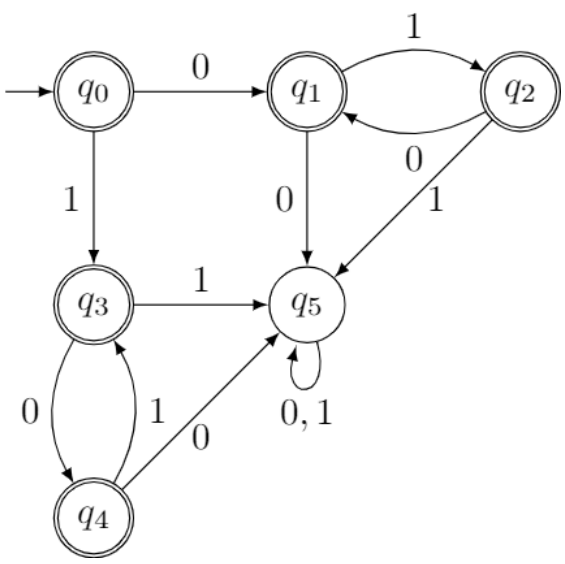

Your Answer: | Correct Answer: 4 | Not Attempted | Time taken: 00min 00sec | Discuss

Q #54 Multiple Select Type | Award: 2 | Penalty: 0 | Theory of Computation

Let D_1 and D_2 be two Deterministic Pushdown Automata. Which of the following problems is/are undecidable? (Mark all the appropriate choices)

A. Is $L(D_1) \cap L(D_2)$ a Deterministic-CFL?
B. Is $L(D_1) \cap L(D_2) = \emptyset$?
C. Is $L(D_1) \cup L(D_2)$ a Deterministic-CFL?
D. Is $L(D_1) \cup L(D_2) = \sigma^*$?

Your Answer: | Correct Answer: A;B;C;D | Not Attempted | Time taken: 00min 00sec | Discuss

Q #55 Multiple Select Type | Award: 2 | Penalty: 0 | Mathematical Logic

Which of the following is/are correct formalization of the sentence? (Mark all the appropriate choices)

" Every student will do well in some examination"

Here, $dowell(x, y)$ means student x will do well in examination y.

A. $\forall x(student(x) \implies \exists y(exam(y) \land dowell(x,y)))$
B. $\forall x(student(x) \implies \exists y(exam(y) \implies dowell(x,y)))$
C. $\neg\exists x(student(x) \implies \exists y(exam(y) \land dowell(x,y)))$
D. $\neg\exists x(student(x) \land \neg\exists y(exam(y) \implies dowell(x,y)))$

Your Answer: | Correct Answer: A | Not Attempted | Time taken: 00min 00sec | Discuss

Copyright & Stuff